SIEMENS

SINAMICS

G120 Control Units CU240S

Getting Started

FW 3.0: CU240S / CU240S DP / CU240S DP-F

FW 3.1: CU240S PN / CU240S PN-F

10/2007

A5E01301803B AA

Safety Guidelines

This manual contains notices you have to observe in order to ensure your personal safety, as well as to prevent damage to property. The notices referring to your personal safety are highlighted in the manual by a safety alert symbol, notices referring only to property damage have no safety alert symbol. If more than one degree of danger is present, the warning notice representing the highest degree of danger will be used. A notice warning of injury to persons with a safety alert symbol may also include a warning relating to property damage.

Qualified Personnel

The device/system may only be set up and used in conjunction with this documentation. Commissioning and operation of a device/system may only be performed by **qualified personnel**. Within the context of the safety notes in this documentation qualified persons are defined as persons who are authorized to commission, ground and label devices, systems and circuits in accordance with established safety practices and standards.

Prescribed Usage:, Note the following:

⚠ WARNING
This device may only be used for the applications described in the catalog or the technical description and only in connection with devices or components from other manufacturers which have been approved or recommended by Siemens. Correct, reliable operation of the product requires proper transport, storage, positioning and assembly as well as careful operation and maintenance.

Disclaimer of Liability

We have reviewed the contents of this publication to ensure consistency with the hardware and software described. Since variance cannot be precluded entirely, we cannot guarantee full consistency. However, the information in this publication is reviewed regularly and any necessary corrections are included in subsequent editions.

Siemens AG
Automation and Drives
Postfach 48 48
90327 NÜRNBERG
GERMANY

Ⓟ 09/2007

Table of contents

1 Warnings and Cautions

General

⚠ WARNING

This equipment contains dangerous voltages and controls potentially dangerous rotating mechanical parts. Non-compliance with the Warnings or failure to follow the instructions contained in this manual can result in loss of life, severe personal injury or serious damage to property.

Only suitable qualified personnel should work on this equipment, and only after becoming familiar with all safety notices, installation, operation and maintenance procedures contained in this instruction. The successful and safe operation of this equipment is dependent upon its proper handling, installation, operation and maintenance.

The power supply, DC and motor terminals, the brake and thermistor cables can carry dangerous voltages even if the inverter is inoperative. Wait at least five minutes to allow the unit to discharge after switching off the line supply before carrying out any installation work. It is strictly prohibited for any mains disconnection to be performed on the motor-side of the system; any disconnection of the mains must be performed on the mains-side of the Inverter.

When connecting the line supply to the Inverter, make sure that the terminal case of the motor is closed. When changing from the ON to OFF-state of an operation if an LED or other similar display is not lit or active; this does not indicate that the unit is switched-off or powered-down.

The inverter must always be grounded. Isolate the line supply before making or changing connections to the unit. Ensure that the inverter is configured for the correct supply voltage. The inverter must not be connected to a higher voltage supply.

Take particular notice of the general and regional installation and safety regulations regarding work on dangerous voltage installation (e.g. EN 50178) as well as the relevant regulations regarding the correct use of tools and personal protective equipment (PPE).

⚠ CAUTION

Children and the general public must be prevented from accessing or approaching the equipment!

This equipment may only be used for the purpose specified by the manufacturer. Unauthorized modifications and the use of spare parts and accessories that are not sold or recommended by the manufacturer of the equipment can cause fires, electric shocks and injuries.

NOTICE

Keep these instructions within easy reach of the equipment and make them available to all users.

Whenever measuring or testing has to be performed on live equipment, the regulations of Safety Code BGV A2 must be observed, in particular § 8 "Permissible Deviations when Working on Live Parts". Suitable electronic tools should be used.

Before installing and commissioning, please read the safety instructions and warnings carefully and all the warning labels attached to the equipment. Make sure that the warning labels are kept in a legible condition and replace missing or damaged labels.

Ensure that the appropriate circuit-breakers/fuses with the specified current rating are connected between the power supply and the inverter.

These instructions assume that the user is fully conversant with the use of the following technologies:

- PLCs
- The commissioning software STARTER
- PROFIdrive profiles and protocols.

The commissioning procedure outlined in this manual is for Standard Inverters only - Fail-safe commissioning is covered in the Operating Instructions.

2 Installation

Command and setpoint sources

Control Unit CU240S

The inverter is controlled and monitored per default via terminals.

Control Unit CU240S DP / CU240S DP-F

The inverter is controlled and monitored per default via the PROFIBUS DP interface.

Control Unit CU240S PN / CU240S PN-F

The inverter is controlled and monitored per default via the PROFINET interface.

Note

The command and setpoint sources can be changed in the commissioning procedure or via Parameters P0700 and P1000.

2.1 Installing the Control Unit (all variants)

Description

The CU controls the functions of the inverter. It cannot be used without a Power Module (PM), also the PM cannot be used without a CU. The CU as well as the PM are IP20 rated.

⚠ WARNING

An inverter can be switched on unintentionally if the installation is not performed correctly. The inverter must be started-up by personnel who are qualified and trained in installing systems of this type.

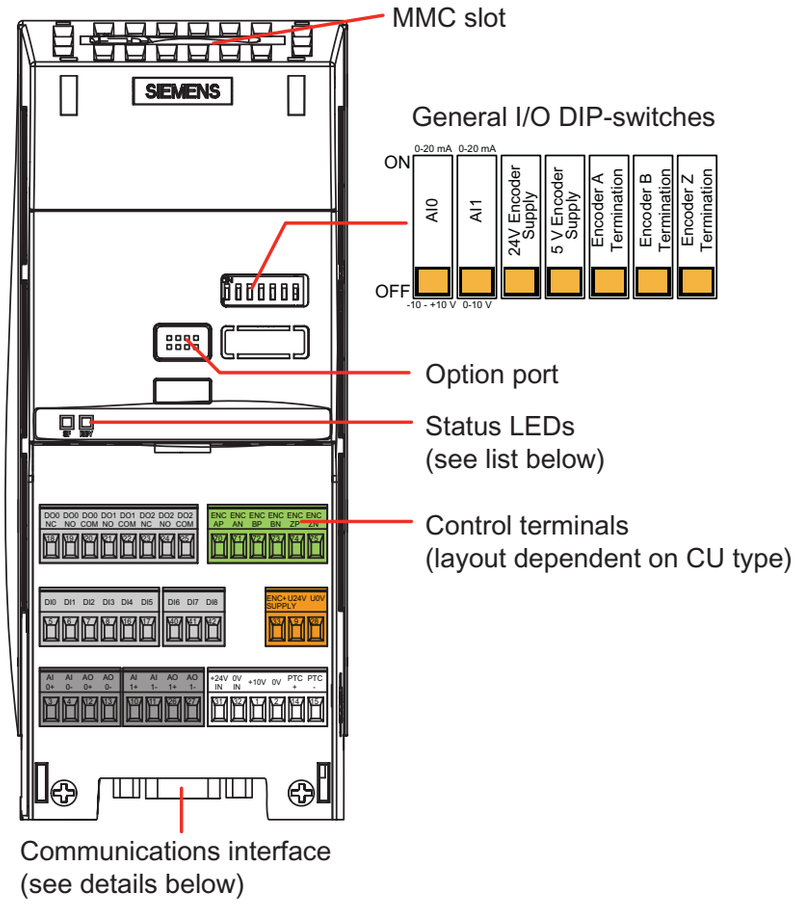

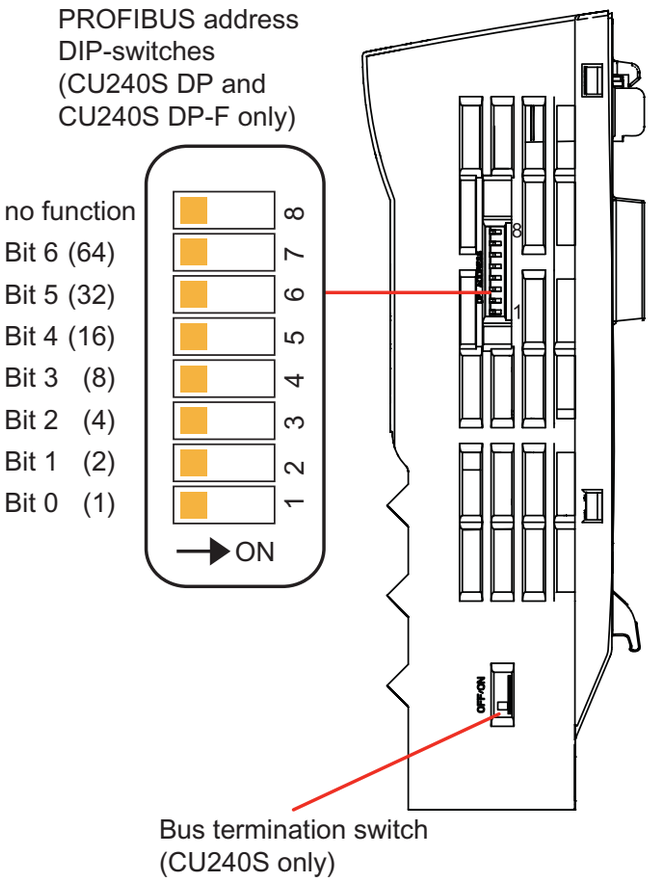

Status LEDs

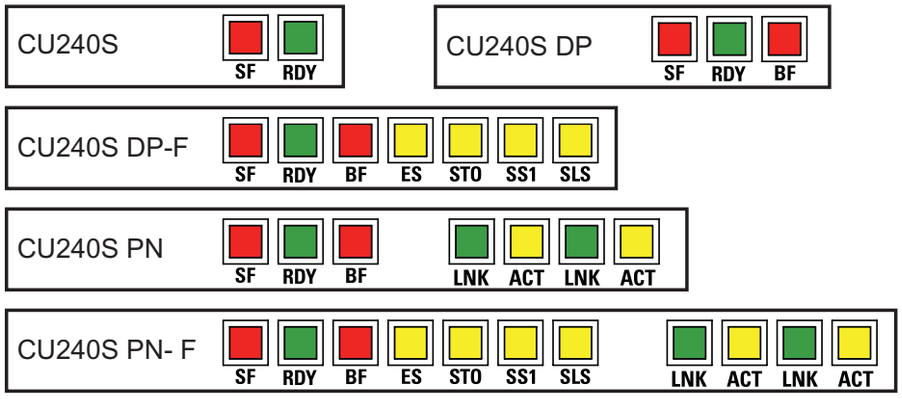

Communications interfaces

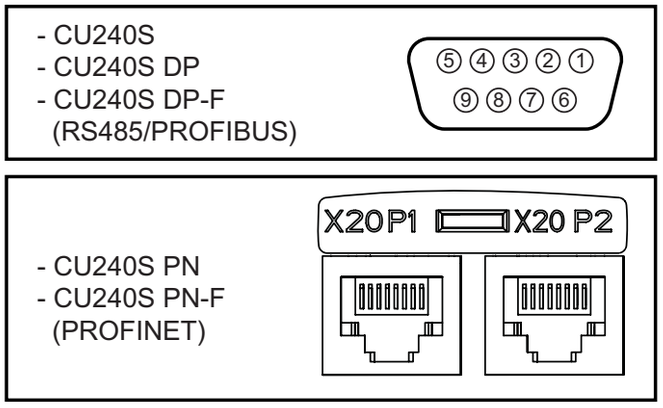

Interfaces of the CU240S Control Units.

The interfaces are shown in the figure below.

Common Interfaces

The CU240S Control Units have a number of interfaces such as terminals, general I/O DIP switches or MMC interface and Option Port in common.

Different Interfaces

- 9-pole SUB D connector as communication interface for
  - CU240S (USS via RS485),
  - CU240S DP (PROFIBUS DP)
  - CU240S DP-F (PROFIBUS DP)
- Failsafe terminals for
  - CU240S DP-F: Two paired fail-safe digital inputs,
  - CU240S PN-F: marked with a "*" in the figure
- DIP switches to set the PROFIBUS address
  - CU240S DP (PROFIBUS DP)
  - CU240S DP-F (PROFIBUS DP)
- RJ45 connectors as communication interface
  - CU240S PN: Two connectors
  - CU240S PN-F: Two connectors

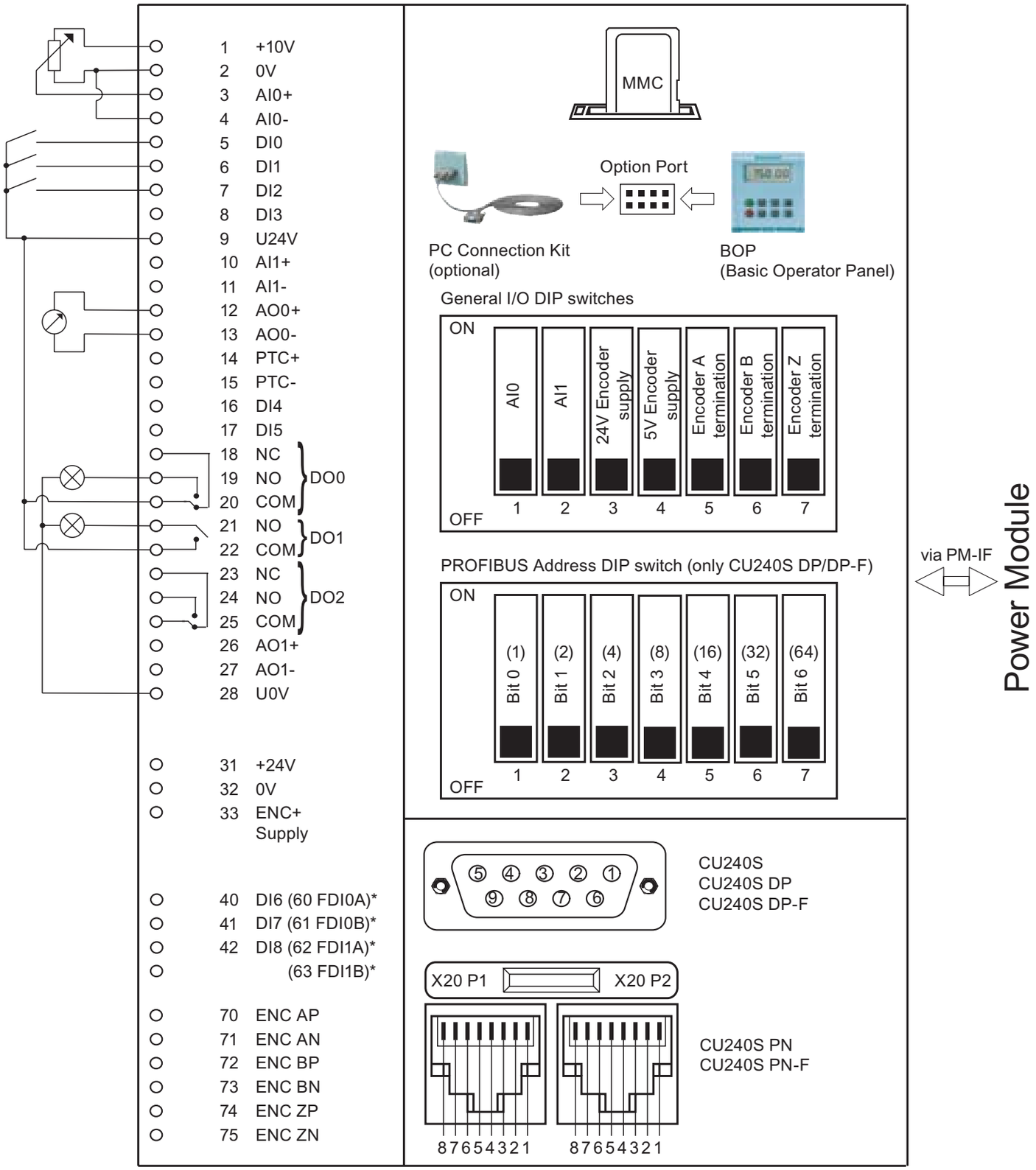

* Failsafe versions in brackets

Fitting the Control Unit to the Power Module

The Control Unit is snapped onto the Power Module as shown in the figure below. To disconnect the CU push the release button on top of the PM.

The process of fitting the Control Unit to the Power Module is the same technique independent from the type of G120 control unit or G120 power module.

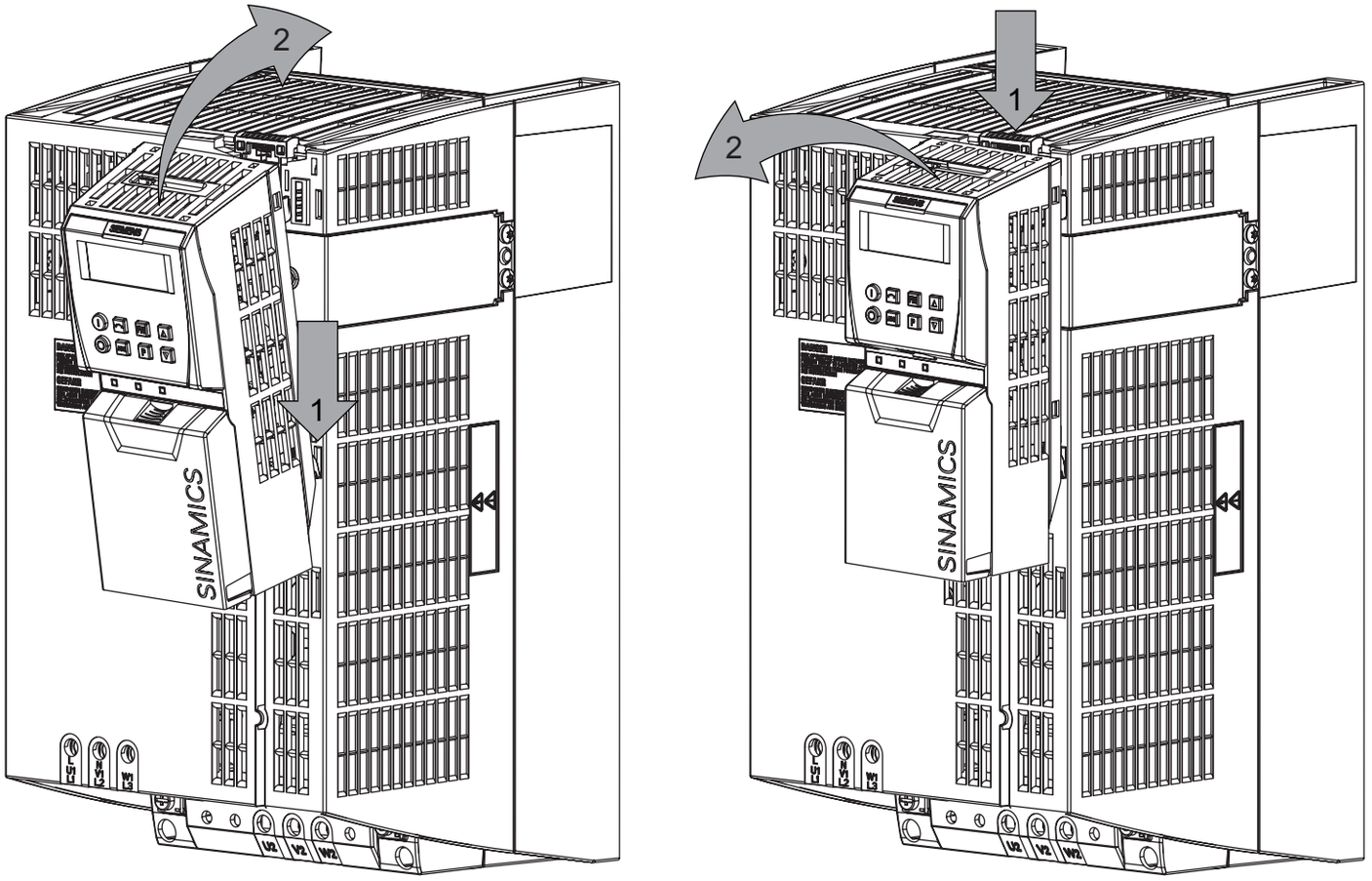

2.2 Terminals

Overview of CU240S Terminals

Control Unit	CU240S / CU240S DP CU240S PN	CU240S DP-F CU240S PN-F
Digital Inputs (DI)	9	6
Fail-safe digital Inputs (FDI)	--	2
Digital Outputs (DO)	3	3
Analog Inputs (AI)	2	2
Analog Outputs (AO)	2	2
PTC/KTY84 interface	Yes	
Encoder interface	1, TTL or HTL	
Ext. 24 V	Yes	

Terminal tightening torque

The maximum tightening torque of the control terminals is 0.25 Nm (2.2 lbf.in). The nominal length of cable cross-section is 1.5 $mm^{2.}$

24 V power supply

Normally the CU is supplied with 24 V from the Power Module. But it is also possible to use an external DC 24 V supply (20.4 V … 28.8 V, 0.5 A). It must be connected to the Control Unit terminals 31 (+ 24 V In) and 32 (0 V In). Some reasons for using an external 24 V power supply are:

- The PROFIBUS DP interface is required to communicate with the Control Unit when the Power Module mains power is not present
- Encoder supply

⚠ CAUTION

Care must be taken to ensure that the 24 V DC power is connected correctly or damage to the Control Unit may occur.

Note

If the CU is externally powered with 24 V DC but the power module is disconnected from the mains supply, the faults F0001 … F0028 are not generated.

Cable length for 24 V DC supply and I/O cables

The maximum cable length on the 24 V DC supply and I/O cables connected to the CU must not exceed 10 m (32.8 ft).

Use of unscreened cables is possible, however we recommend the use of screened cables, in order to fulfill the EMC requirements for the CE marking and fail-safe products (CU240S DP-F, CU240S PN-F).

2.3 SUB D connector for RS485 interface

Socket

The Control Units CU240S have a 9-pin female sub-D socket for connecting the inverter via an RS485 interface.

	Pin	Designation	Description
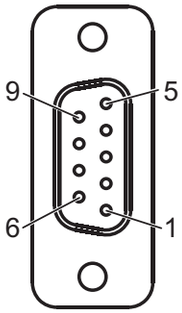	1	-	Unused
	2	-	Unused
	3	RS485P	Receive- and transmit signal (+)
	4	-	Unused
	5	0 V	Ground reference
	6	-	Unused
	7	-	Unused
	8	RS485N	Receive- and transmit signal (-)
	9	-	Unused
	X	Screen (casing)	Potential equilisation

Connector

A standard 9 pin sub-D connector can be used for USS connection via RS485.

Standard 9 pin sub D connector	
PG socket	No
Max. baud rate	115200 baud
Outgoing cable unit	180°

Bus termination

The RS485 termination can be activated via switches on the housing of the SINAMICS G120.

The bus termination switch is illustrated in figure "Control Units CU 240S" in section "Layout and Block Diagram".

Cable Lengths and number of devices

Baudrate in bit/s	Max Number of Devices	Max Cable Length
9600	32	1200 m
19200	32	1200 m
38400	32	1200 m
57600	32	1200 m
115200 (maximum baudrate)	30	1000 m

2.4 Connecting the PROFIBUS DP

Connecting the Inverter to the PROFIBUS DP network

The inverter is to be connected to the PROFIBUS DP network via a sub-D socket on the CU240S DP or CU240S DP-F. The pins of the socket are short-circuit-proof and isolated.

	Pin	Designation	Description	Range
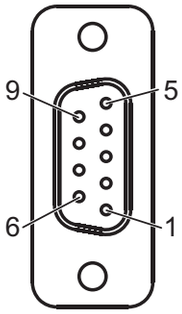	1	Shield	Ground connection	
	2	U0V	Isolated and user supply reference	
	3	RxD/TxD-P	Receive/send data P (B/B')	RS485
	4	CNTR-P	Control Signal	TTL
	5	DGND	PROFIBUS data reference potential (C/C')	
	6	VP	Supply voltage positive	5 V ± 10 %
	7	U24V	Isolated user supply +24 V @ 100 mA	
	8	RxD/TxD-N	Receive/send data N (A/A')	RS485
	9	-	Not assigned	
	Case	Cable shield	Cable shield	

External 24 V supply

If the PROFIBUS DP interface is required to communicate with the Control Unit when the Power Module mains power is not present, a 24 V supply must be connected to the Control Unit terminals 31 (+ 24 V I_n) and 32 (0 V I_n).

Maximum cable length

The PROFIBUS system can handle up to 126 stations. To run all these stations the PROFIBUS system is divided into segments. All segments have to be connected via repeater. The maximum number of stations on any segment must not exceed 32.

The maximum cable lengths are dependent on the baud rate (transmission speed). The maximum cable lengths specified in the table below can be guaranteed only with PROFIBUS bus cables (for example, Siemens PROFIBUS bus cable, order number 6XV1830-0EH10).

Baud rate	Max. cable lengths for one segment
9.6 kbaud … 187.5 kbaud	1000 m (3280 ft)*
500 kbaud	400 m (1312 ft)*
1.5 Mbaud	200 m (656 ft)*
3 Mbaud … 12 Mbaud	100 m (328 ft)*
* Repeaters can be installed to increase the length of a segment.	

Cable installation rules

During installation the bus cable must not be twisted, stretched or compressed.

Supplementary constraints as regards electromagnetic compatibility must also be observed.

Connectors

To connect the PROFIBUS cable to the PROFIBUS DP interface, a bus connector of one of the types described in the following table is recommended.

Order Number	6GK1 500-0FC00 / 6GK1 500-0EA02
PG socket	No
Max. baud rate	12 Mbaud
Terminating resistor	On/Off switch
Outgoing cable unit	180°
Interfaces PROFIBUS nodes PROFIBUS bus cable	 9-pin sub D socket 4 modular terminals for wires up to 1.5 mm^2
Connectable PROFIBUS cable diameter	8 ± 0.5 mm

Note

We recommend only these two connectors since they can be used without difficulty for all SINAMICS G120 models and are completely compatible in terms of outgoing cable unit angle.

PROFIBUS terminator

Each bus segment must have a resistor network at both ends as shown in the figure below.

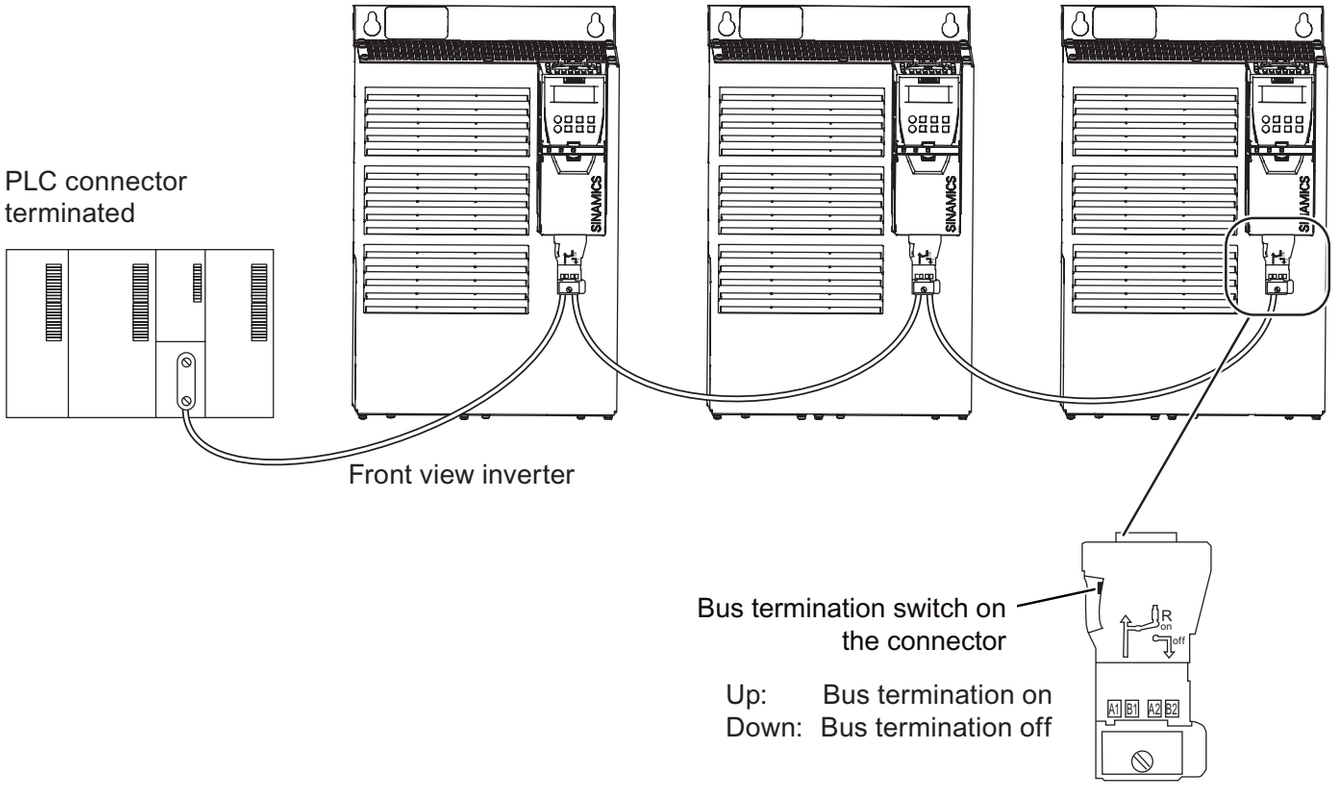

The bus termination resistor has to be activated via the terminator switch on the recommended PROFIBUS connector

The switches of the bus terminator provides both the 220 Ω termination and the 390 Ω biasing. The 390 Ω biasing maintains the potential difference between the signals in the PROFIBUS network cables.

⚠ WARNING
It must be ensured that any node, where the biasing components of the bus are connected, is powered at all times in which the bus is in operation.

Removing a bus connector

You can remove the bus connector with looped-through bus cable from the PROFIBUS DP interface at any time without interrupting the data exchange on the bus. Only the final node must be terminated.

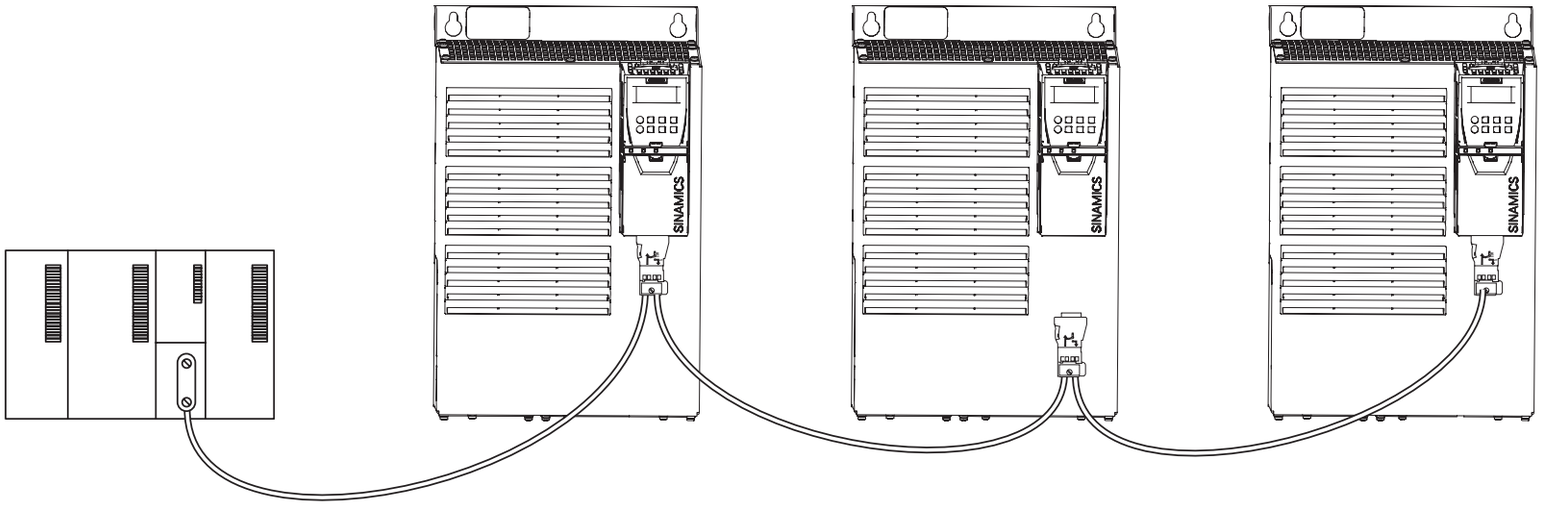

2.5 Connecting a CU240S PN / CU240S PN-F via PROFINET

Socket

The Control Units CU240S PN and CU240S PN-F are equipped with a two port ethernet switch, carried out as RJ45 female sockets. Connection to optical nets is achieved by using switches with both electrical and optical ports, the drive is then connected to an electrical port. Therefore, no power supply for an external electrical/optical inverter is provided.

The assembly of the SIMATIC NET Industrial Ethernet FastConnect RF45 Plug 180 is described in the product information "Assembly Instructions for SIMATIC NET Industrial Ethernet FastConnect RJ45 Plug". For downloading this document, refer to:

http://support.automation.siemens.com/WW/view/en/23175326/130000

	Pin	Designation	Meaning	Core color
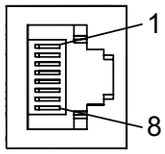	1	TX+	Transmission data +	Yellow
	2	TX	Transmission data -	Orange
	3	RX+	Receiver data +	White
	4	-		
	5	-		
	6	RX-	Receiver data -	blue

Connector

Order Number	6GK1901-1BB10-2Ax0
Label	Industrial Ethernet FC RJ45 Plug 180
Max. baud rate	100 Mbit/s; Cat5e
Outgoing cable unit	180°
Degree of protection	IP20
Operating temperature	-20 °C … +70 °C

Industrial Ethernet Cables and cable length

The CU240S PN provides all Ethernet-cables. As well 1:1 cables as crossover-cables can be used.

	Max. Cable Length	Order Number
Industrial Ethernet FC TP Standard Cable GP 2 x 2	100 m	6XV1840-2AH10
Industrial Ethernet FC TP Flexible Cable GP 2 x 2	85 m	6XV1870–2B
Industrial Ethernet FC Trailing Cable GP 2 x 2	85 m	6XV1870–2D
Industrial Ethernet FC Trailing Cable 2 x 2		6XV1840–3AH10
Industrial Ethernet FC Marine Cable 2 x 2	85 m	6XV1840–4AH10

Cable installation rules

Screening

The screen of the PROFINET cable must be connected with the protective earth, using a screen clamp on the PROFINET cable which must make 360° contact earth. The solid copper core must not be scored when the insulation is removed from the core ends.

Connecting the IO supervisor

You can go online with STARTER in a number of ways, which are illustrated below:

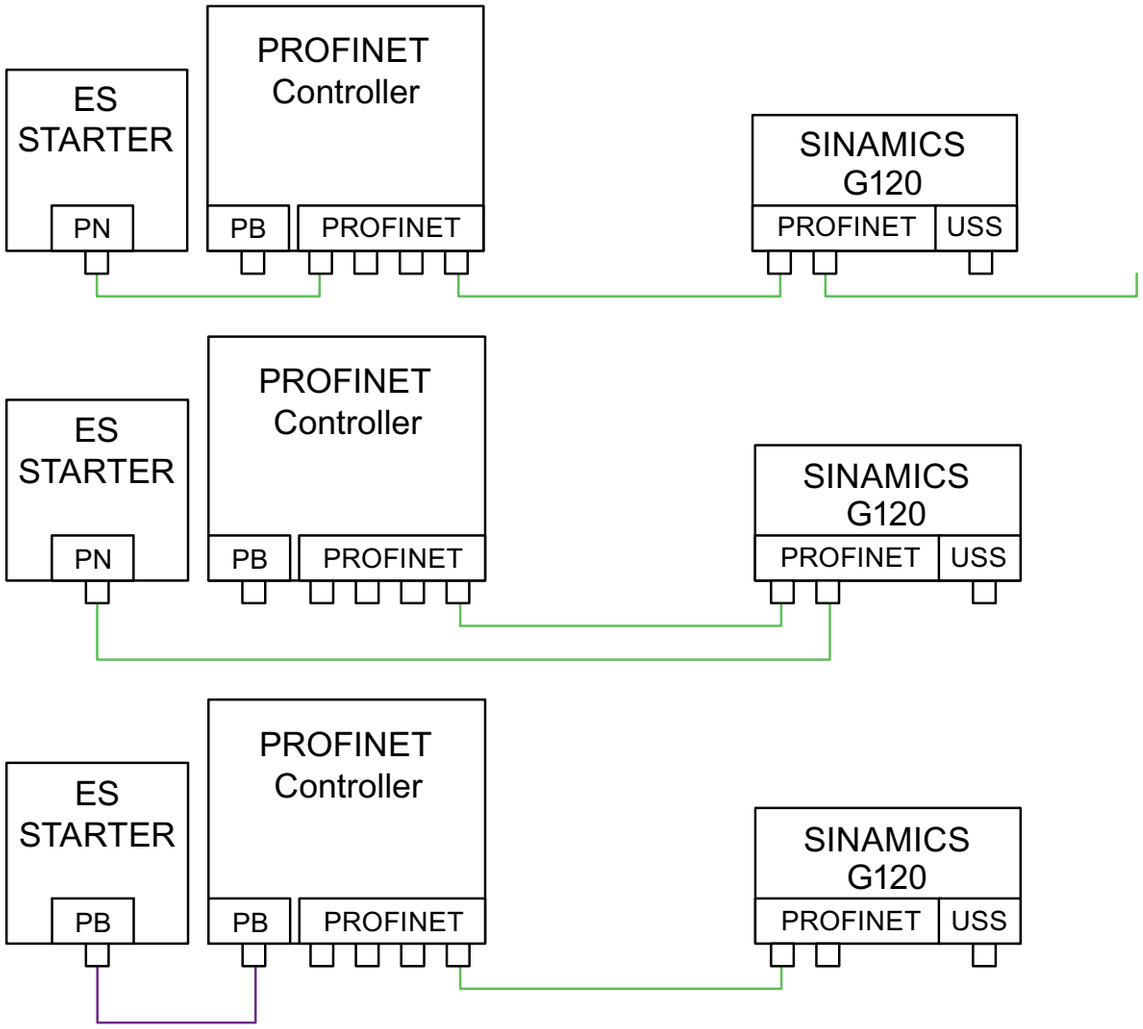

Note

Pay attention to the following restrictions:

- A ring-type topology is not permissible.
- SINAMICS does not support routing from PROFIBUS to PROFINET and vice versa.

3 Check List

Installation check list

Before power is applied to the inverter/motor system, the following checks should be performed:

	Check that:	✓
1	The environmental conditions conform to the inverter/motor specifications	
2	The inverter and the motor are securely mounted	
3	The inverter and motor are correctly installed with adequate cooling provision	
4	The motor and the application/equipment are ready to start, i.e. safe state - motor can rotate	
5	The inverter is correctly earthed/grounded	
6	The input power (supply) voltage matches the inverter's nominal input voltage	
7	The input power (mains) fuses are the correct type and installed correctly	
8	The motor connections are connected to ensure the correct direction of rotation of the motor at start-up	
9	The motor and mains connections are connected and tightened to the required specification	
10	The motor connections are not reversed - the motor will start but serious damage may occur to the connected equipment	
11	The motor cable is routed away from other cables	
12	The control connections are connected and tightened to the required specification	
13	No tools or other objects that can cause damage to the system are present	
14	The inverter is the only power source to the motor	

4 Commissioning

Description

When shipped from the factory the G120 inverter (control unit and power module) must not be operated before a commissioning of the inverter has been performed.

This can be done via:

- downloading a valid parameter set from an MMC, BOP or STARTER
- performing a commissioning via BOP or STARTER

For a successful operation of the inverter-motor combination, the following prerequisites must be fulfilled:

- The rated inverter current is at least as great as the rated current of the motor.
- The power range of the inverter matches the power range of the motor.

Note

Commissioning of fail-safe functions is not described in this manual. Please refer to Operating Instructions and Function manual.

Commissioning with the Getting Started Guide

Commissioning in the Getting Started Guide is described using STARTER via PC Connection Kit. For other commissioning modes please refer to the Operating Instructions of the Control Module.

The STARTER software uses a series of wizards and masks to guide the user through the commissioning procedures for the inverter.

What do you need?

The following items are required to commission the Inverter with STARTER:

- STARTER software is installed on your PC
- The inverter is connected to the PC via the PC connection cable - order number: 6SL3255-0AA00-2AA0

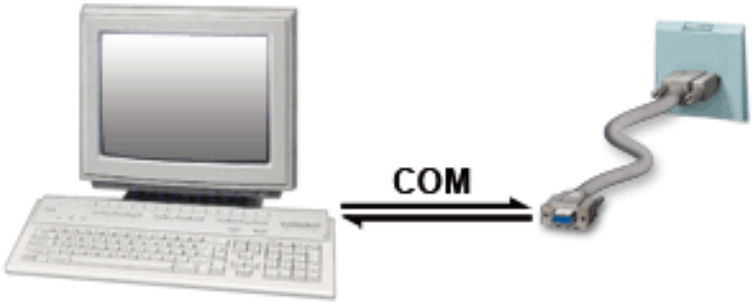

Note

For commissioning the inverter you can use the STARTER software, delivered with the PC Connection Kit or download the latest STARTER software version from the internet under the following link:
http://support.automation.siemens.com/WW/view/de/10804985/133100

4.1 Create a STARTER Project

Commissioning procedure

- Switch the supply voltage to the inverter
- Start Commissioning Software STARTER and use the project wizard as described in the following steps

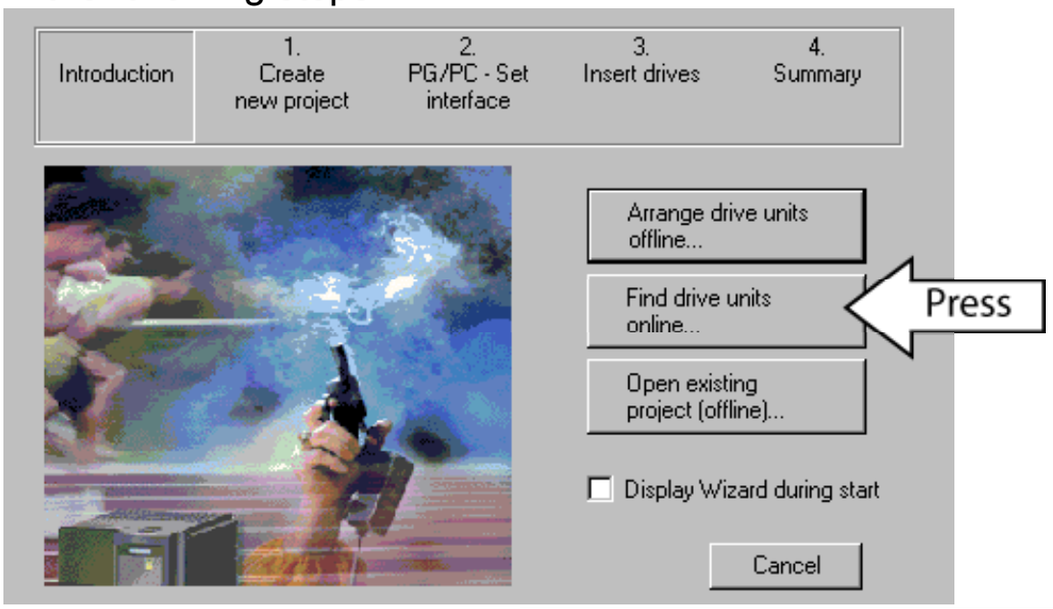

- In the next screen (not shown here), enter a significant project name (in the example "Basic Commissioning)" and if you want a comment then press the "Continue" button. The following dialog box will appear.

  Press "Change and test ..." button to set the PG/PC interface.

  – If "PC COM-Port (USS)" is available as shown in the dialog

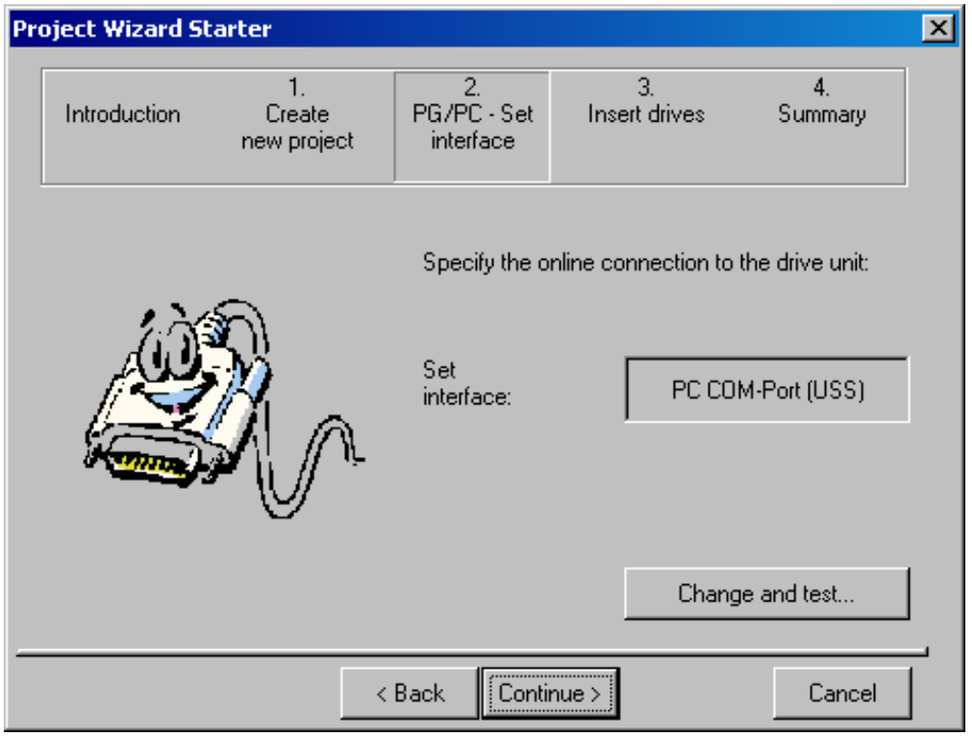

box "PG/PC interface", press the "properties" button.

– If not press the "Select ..." button to install the "PC COM-Port (USS)" interface as shown in the dialog box "Install/Remove Interfaces". If it is installed close the dialog box and press now the "properties" button.

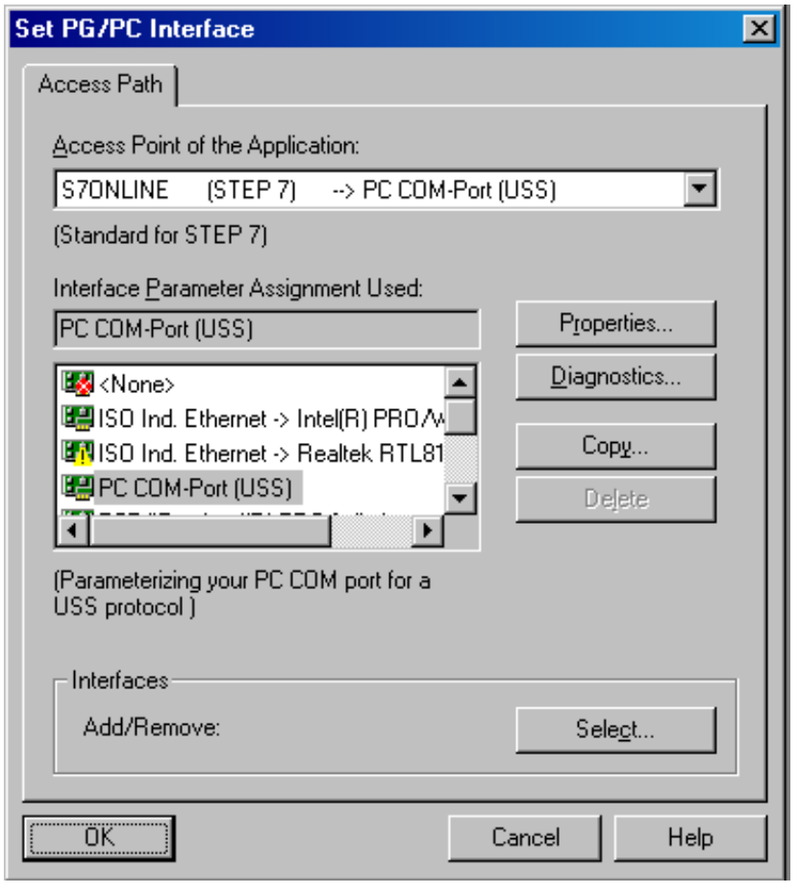

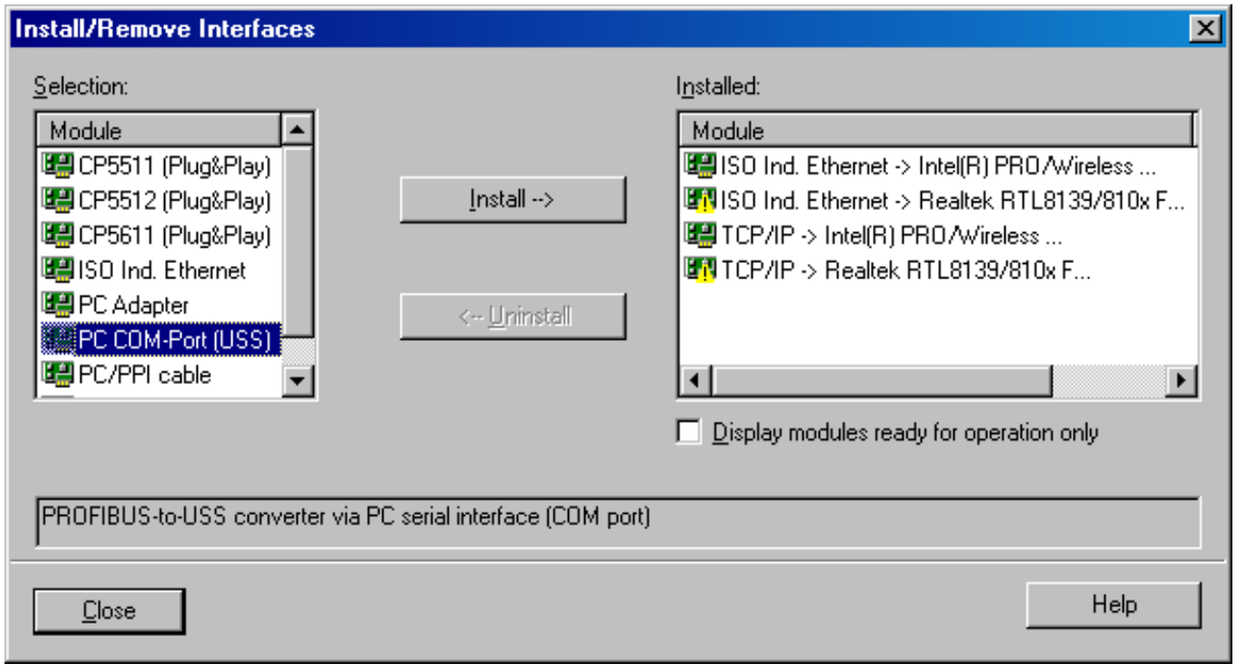

- Setting properties of the COM port
  Via this dialog box, you set the com interface (COM1, COM2, COM3) and the Baud rate (default 38400). To find out the right values, select e.g. COM1 and press the "Read" button. If "???" is displayed in the Baud rate test area select another com interface. In case of the right interface a value will be displayed, that must be chosen via the "Baud rate" select box. In addition, select "Automatic mode" under the tab "RS485". Quit with "OK" brings you back to the dialog box "Set PG/PC interface". Quitting again with "OK" brings you to the step "Insert drives" of the Project Wizard.

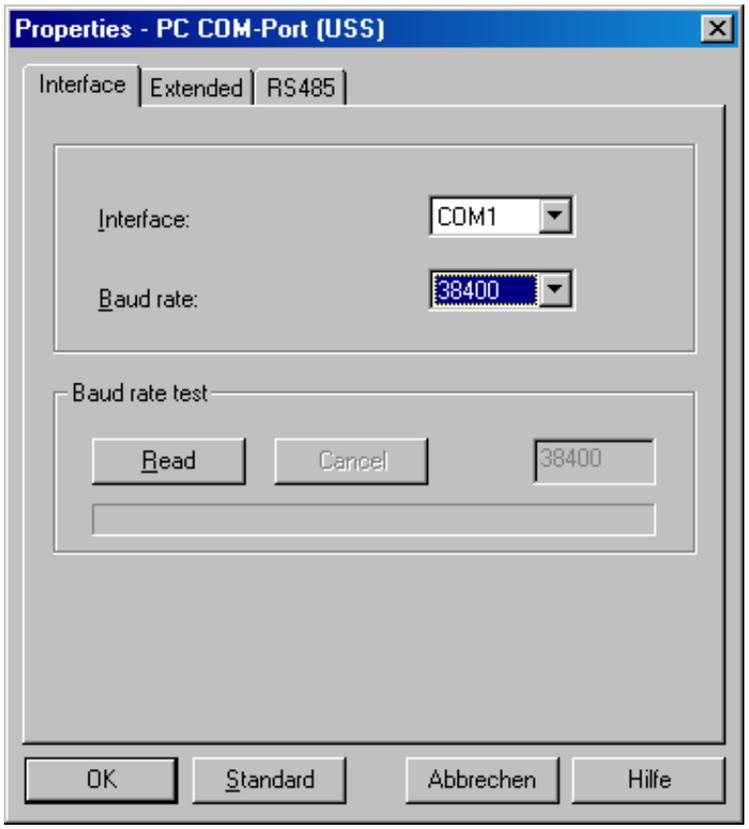

- In this dialog you can enter a name for your inverter - in this case "SINAMICS_G120_CU240S" (no blanks or special characters), then press "Continue" and close the following summary dialog via the "Complete" button.

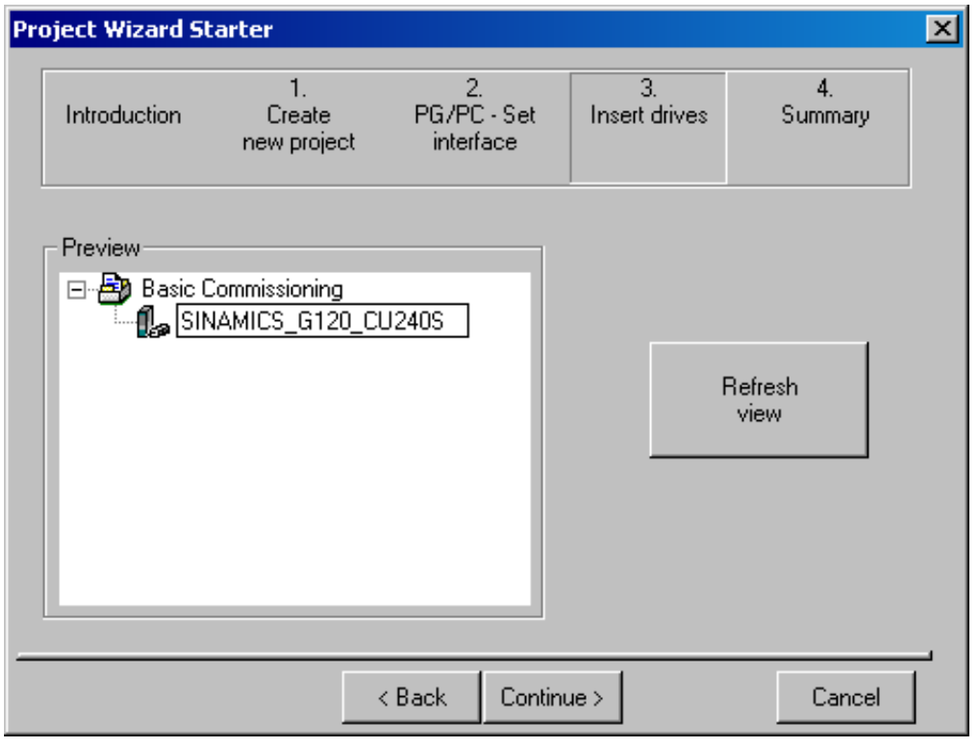

4.2 Going Online with the Inverter

Description

With the above described procedure the project is created and the following STARTER dialog appears, but there is still no online connection established so far.

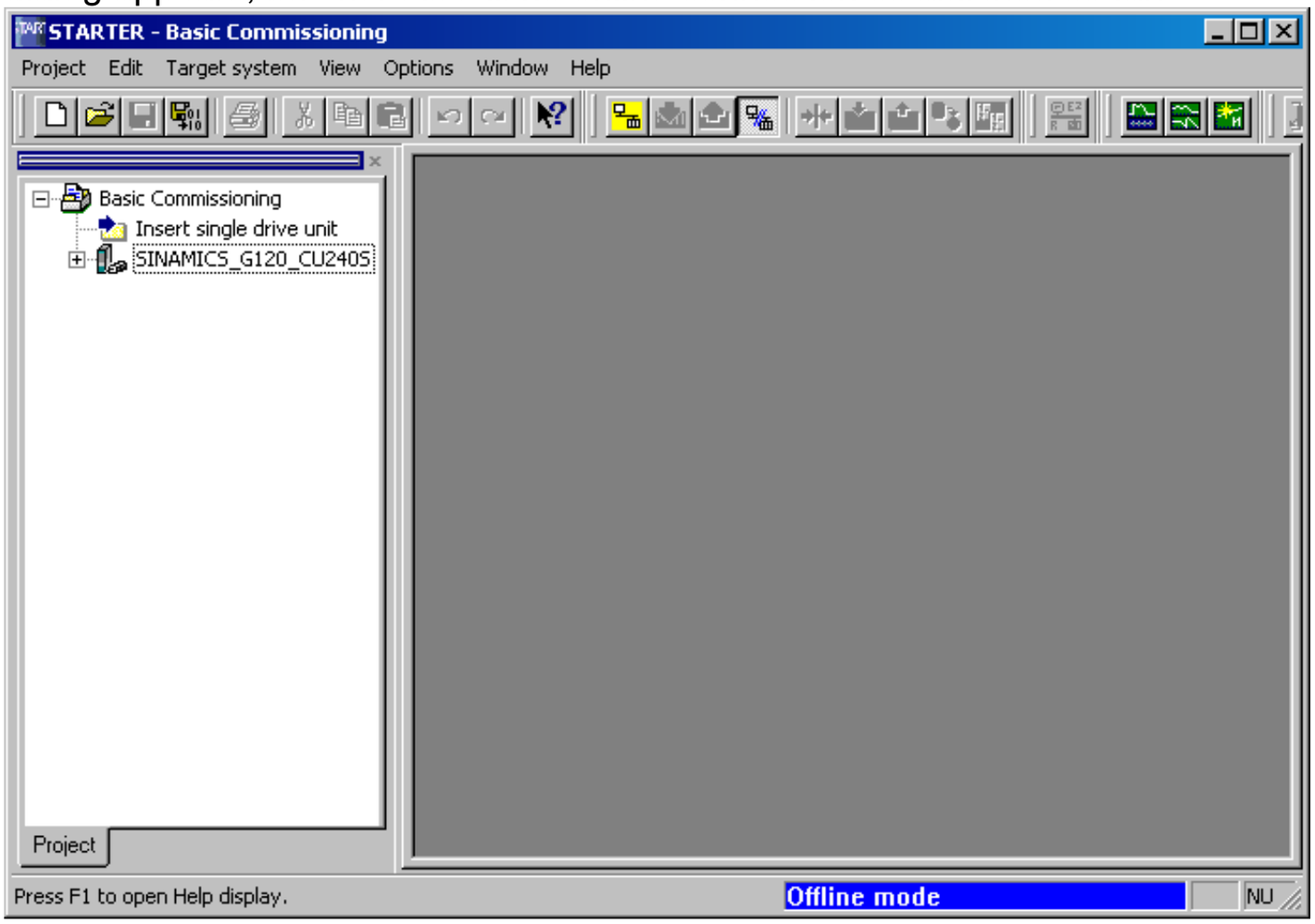

To go online with this inverter press . The following dialog box shows in the left column the online and in the right column the offline saved data. To load the online data to your PC, press "Load HW configuration to PG" and end the dialog with close.

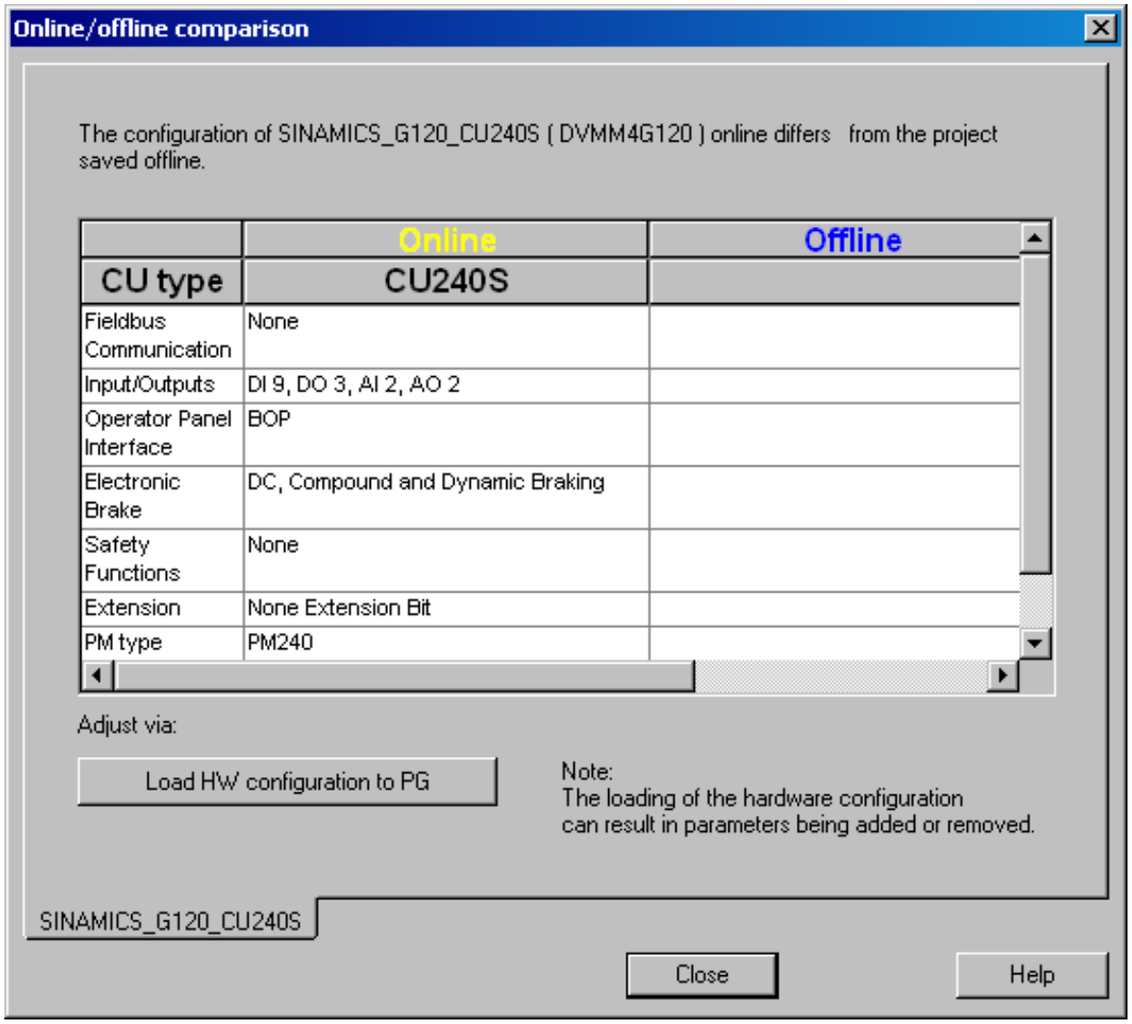

4.3 Start Commissioning

Description

With closing the last dialog from the "Going Online Section" the "Offline mode" at the very down in the dialog box changes to "Online mode" and in case of first commissioning the message F00395 appears.

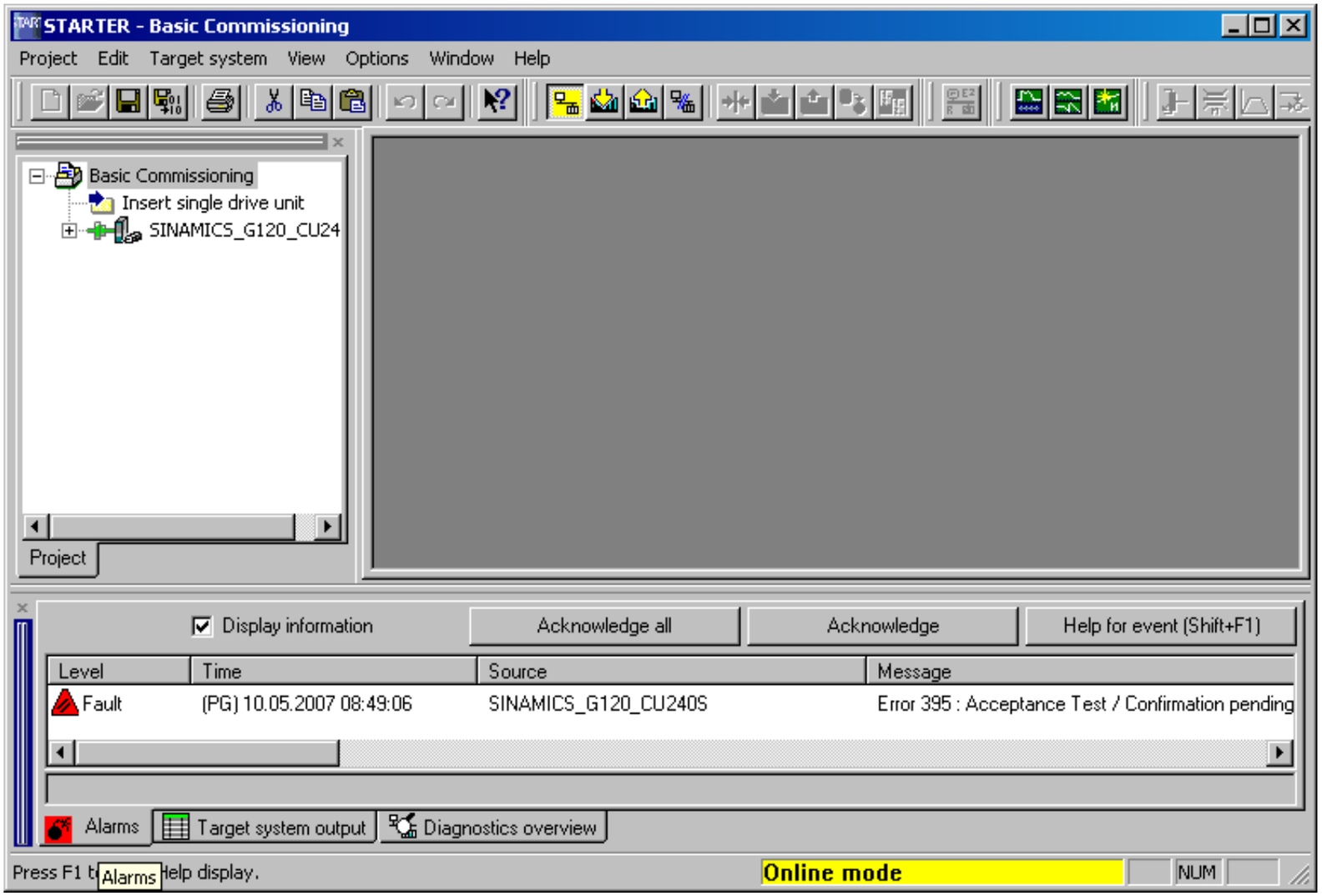

It states that no commissioning has been performed so far with the inverter. To confirm, select the message and press the "Acknowledge" button.

⚠ WARNING

Message F0395

With acknowledging F00395 you overtake the responsibility to perform a commissioning.

Commissioning of inverters with fail-safe functions is not described in this manual.

Note

Information about the symbols used in STARTER can be found in the online help. Press <shift><F1> and then click at the requested symbol. E.g.

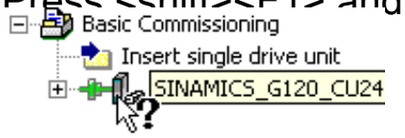

If you have confirmed F0395, open the drive unit ( ), double-click the drive object ( ) and start the wizard for basic commissioning from the following STARTER dialog.

Perform Commissioning Start dialog:

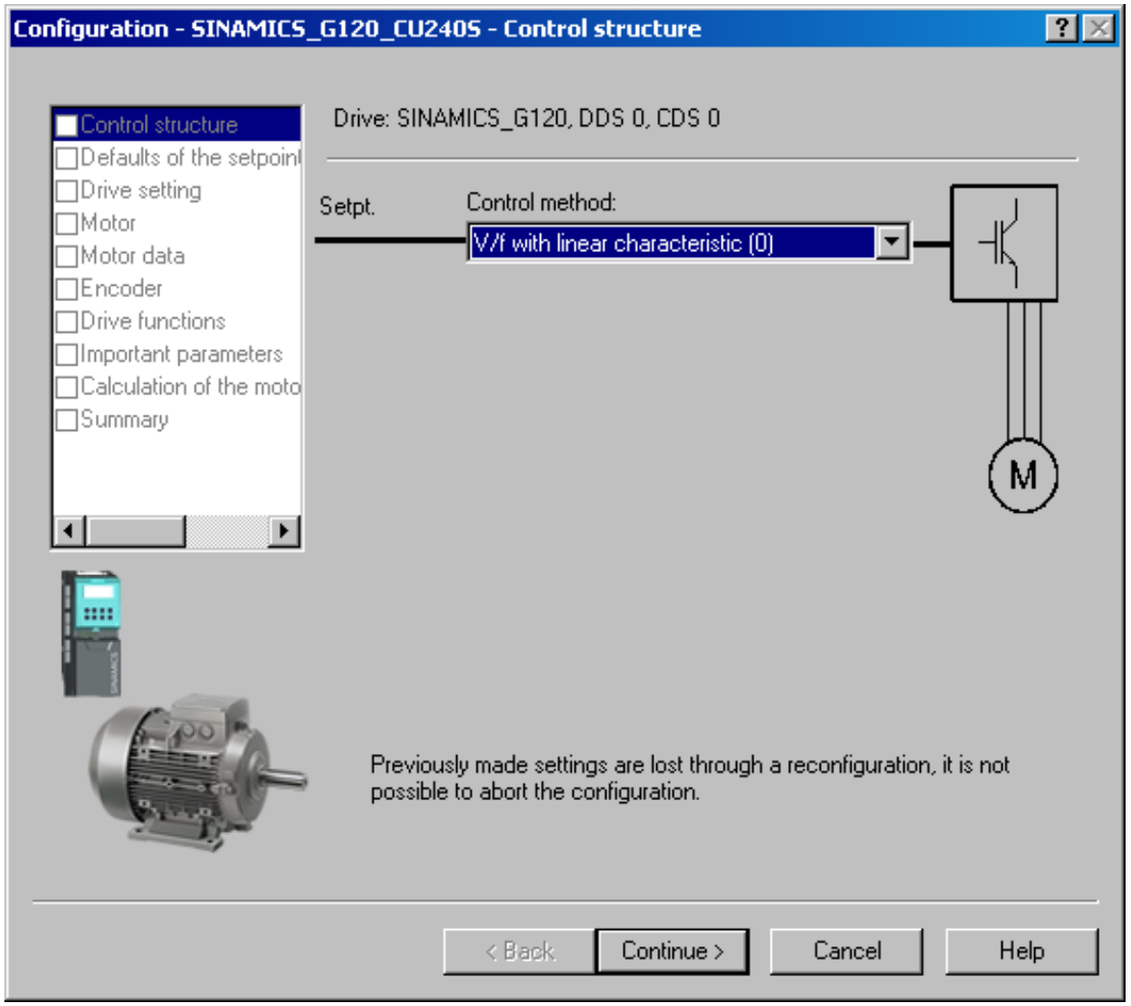

Now you can select the basic commissioning settings for your application via pull-down menus. With pressing "Continue" button you jump to the next item.

In case of "Drive functions" we recommend to select "Identification of all parameters inclusive the saturation curve" as shown in the figure below:

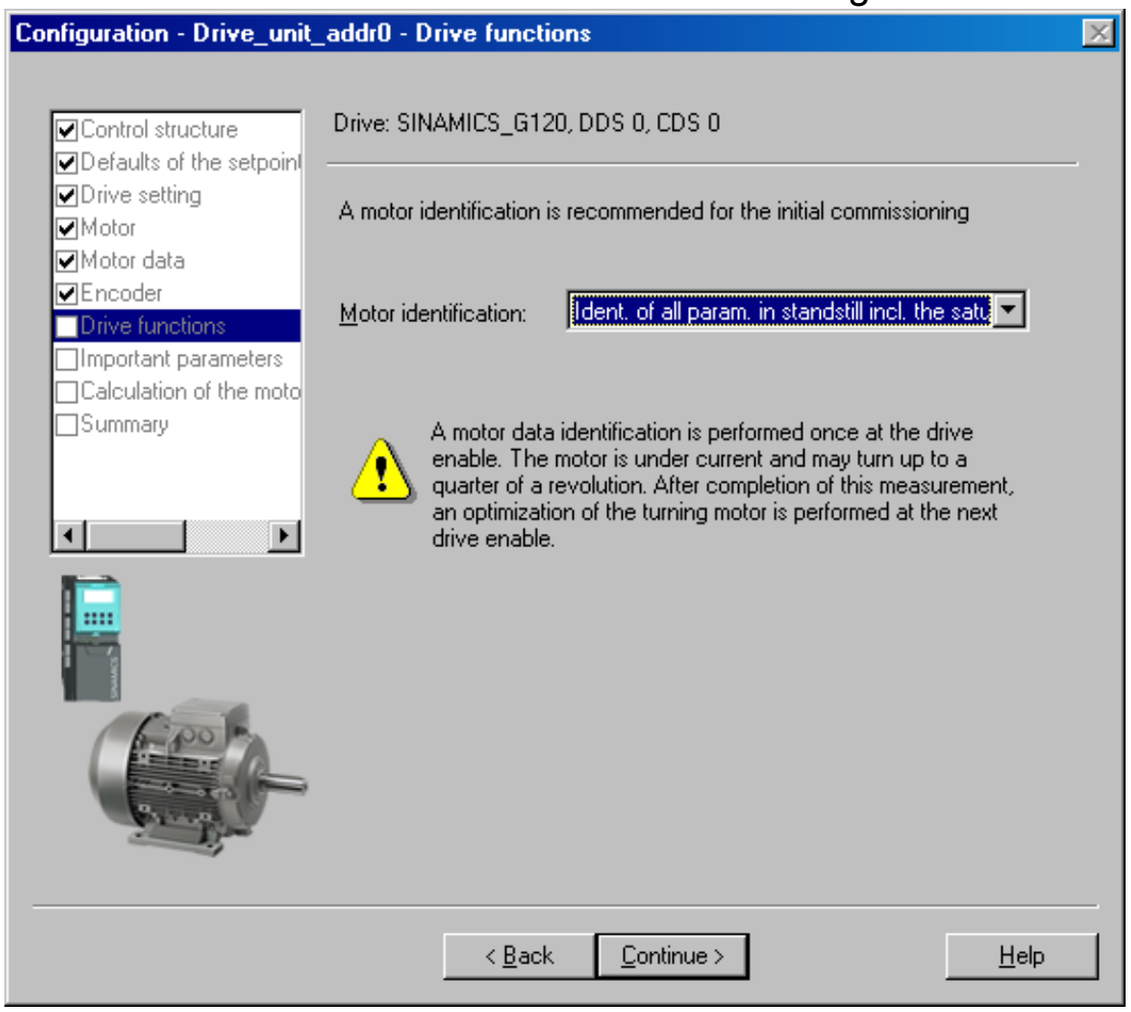

For calculation of the motor data we recommend to select "Restore factory setting and calculate motor data only" as shown in the dialog box.

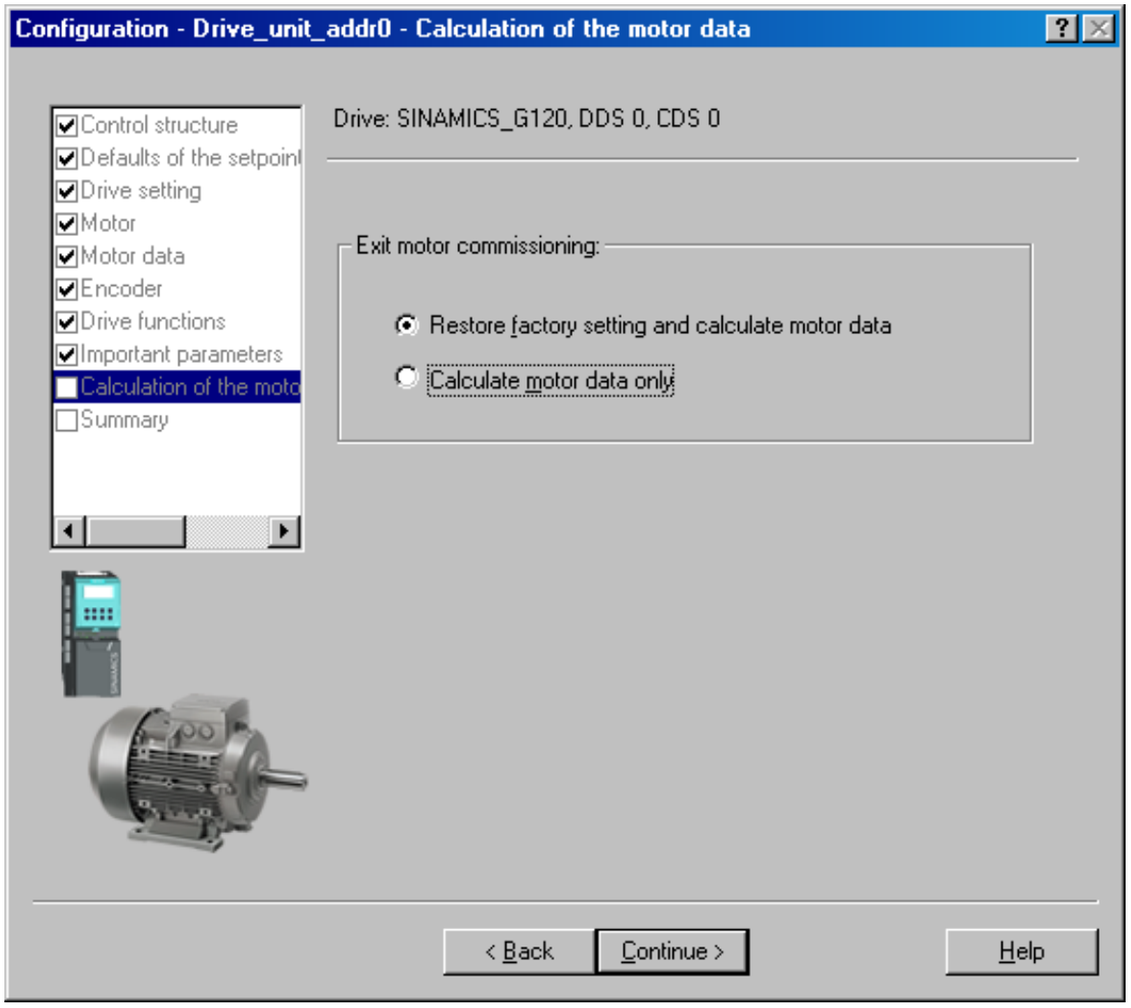

The basic commissioning wizard ends with the following dialog:

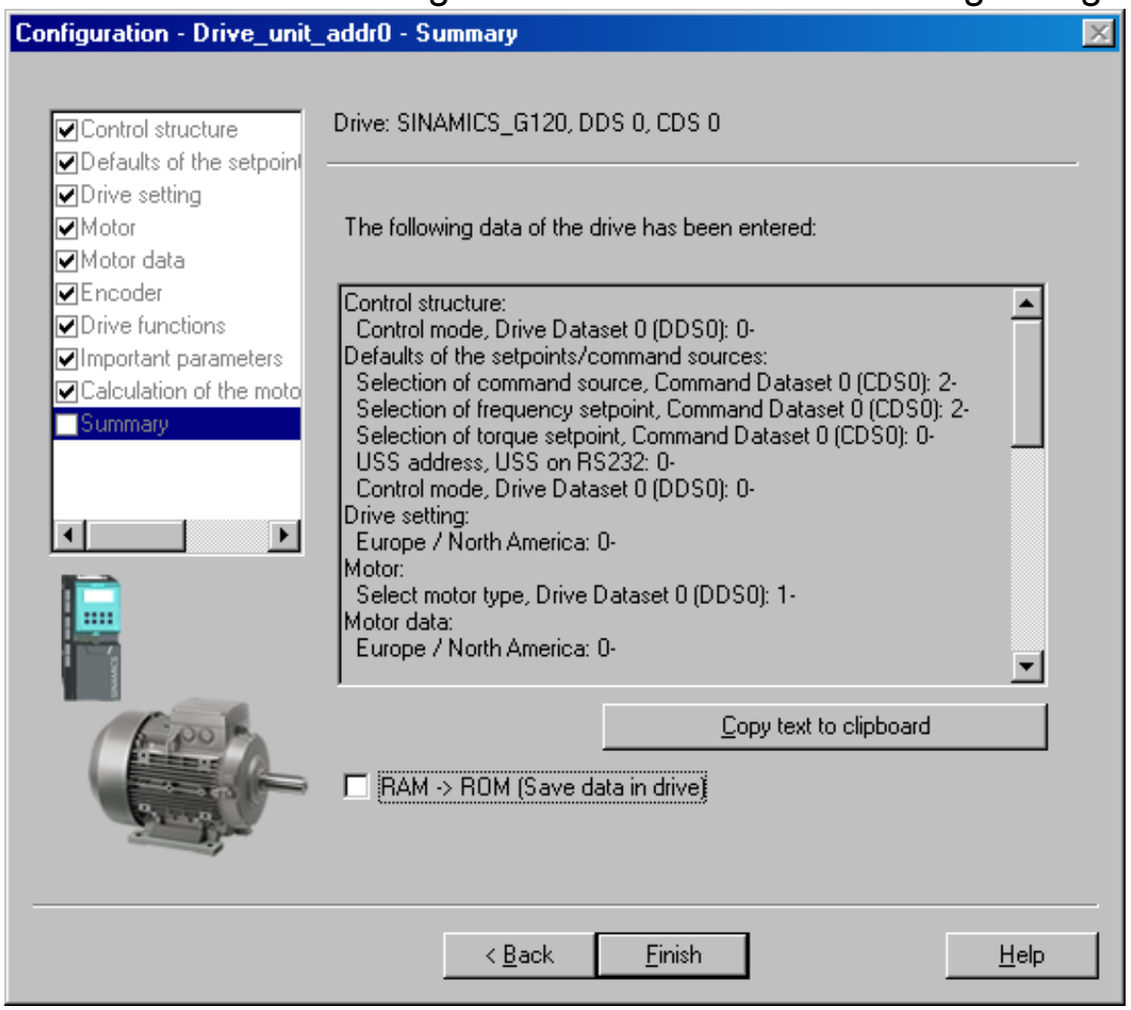

To complete basic commissioning, the motor data identification, selected during basic commissioning must be performed via switching on the inverter. This can be done via the chosen command source (e.g. terminals, BOP or communication) or via STARTER as shown in the dialog box below.

Motor Data identification via STARTER

First click "Control panel" to open the dialog, then press "Assume control priority" (when connected via PC connection Kit, select BOP link (RS232) (the "assume-button" changes to "Return") and select "Enables". Now the ON and OFF buttons get active. Press the ON button start the Motor data identification. While Motor data identification is active, the -button is disabled and in the alarm 541 "Motor Identification active"

will be displayed. Once Motor data identification has finished, the alarm disappears and the inverter switches OFF (becomes colored again).

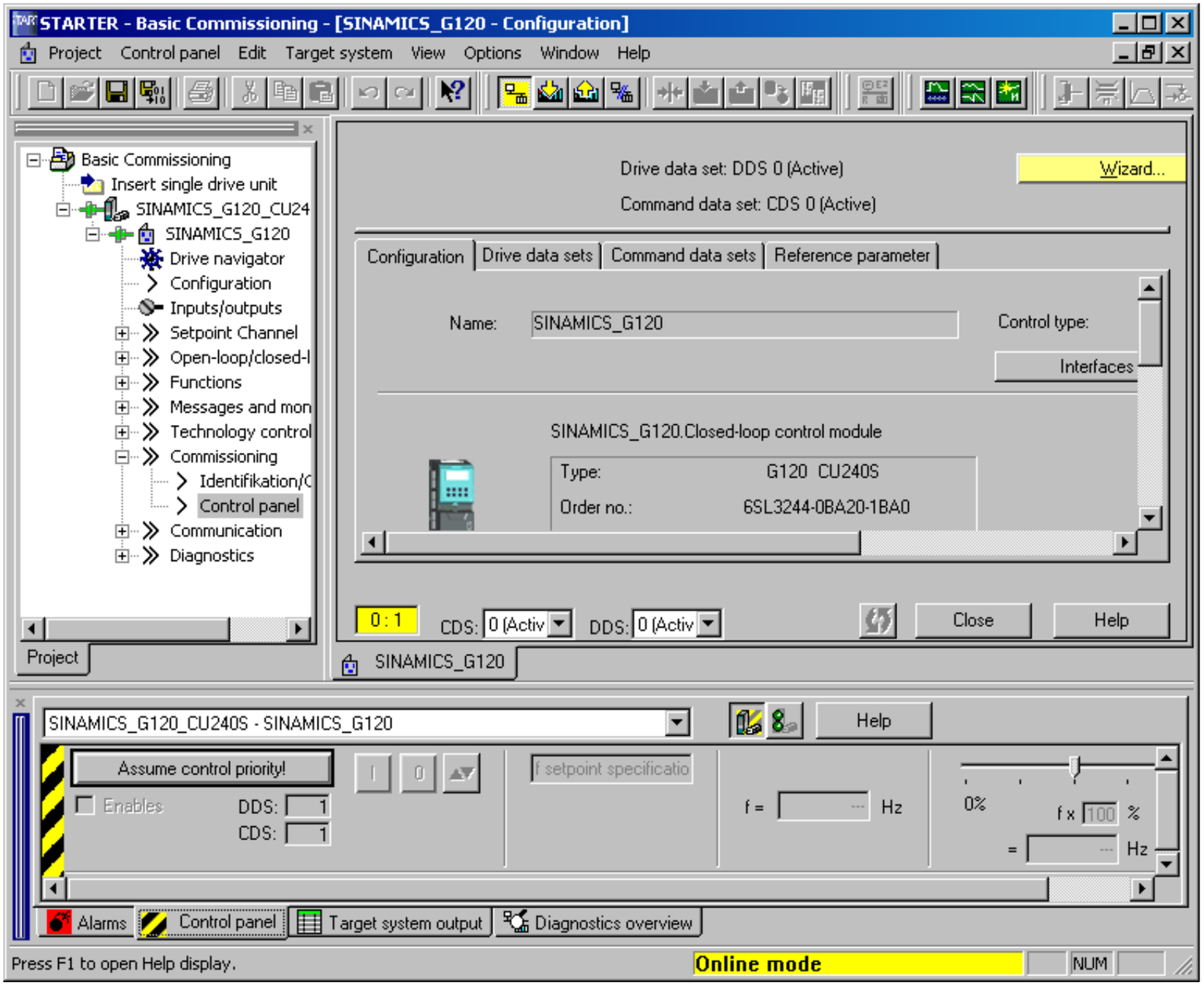

To set the command source back press "Give up control priority!" in the following dialog box. Take care of the warnings displayed.

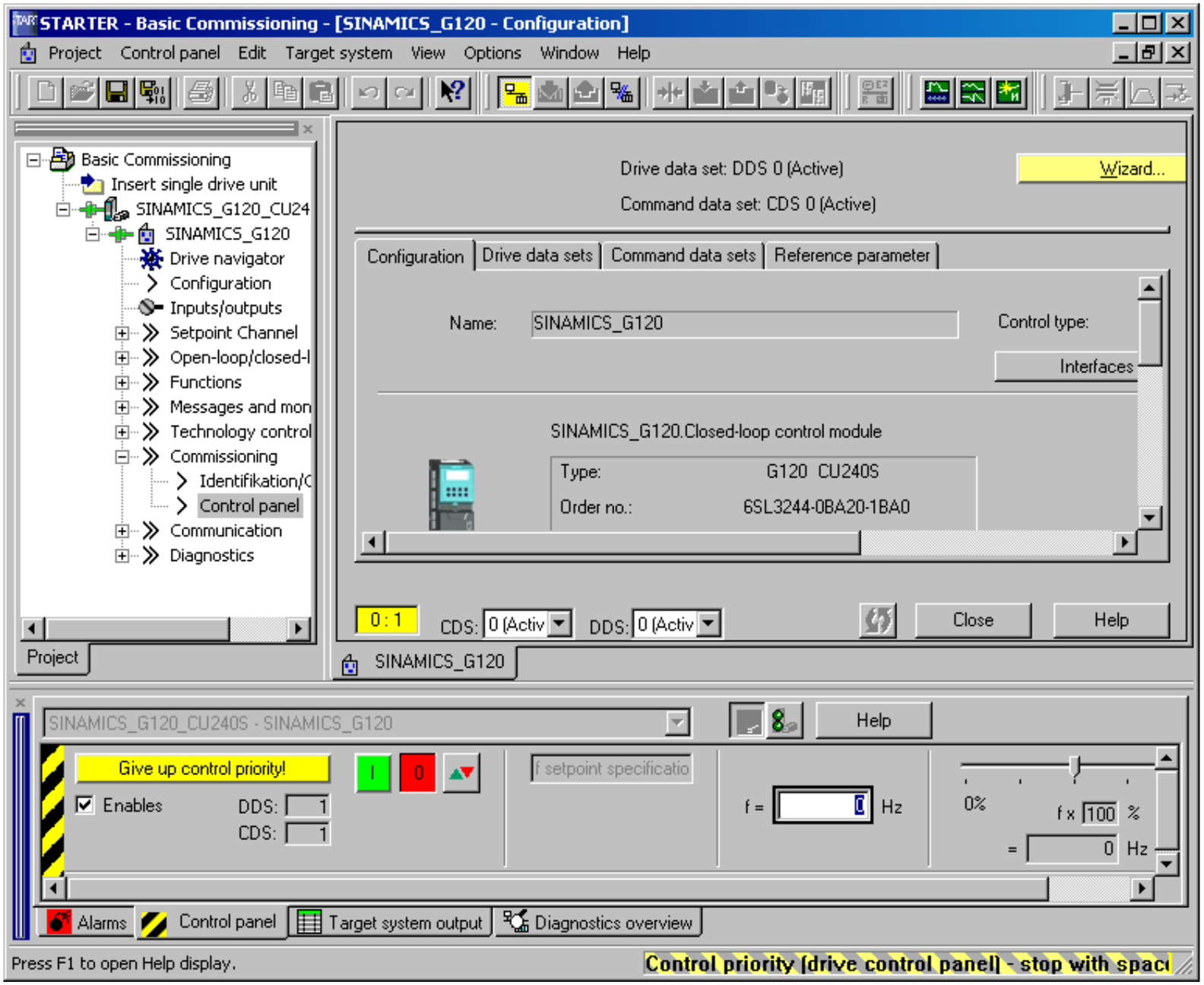

Now the basic commissioning is finished. To save the settings in the EEPROM of your inverter, select the SINAMICS project and press the "Copy RAM to ROM" button .

Commissioning the application

Now you can commission your application via the dialog boxes of the drive navigator or via the functions in the navigation area.

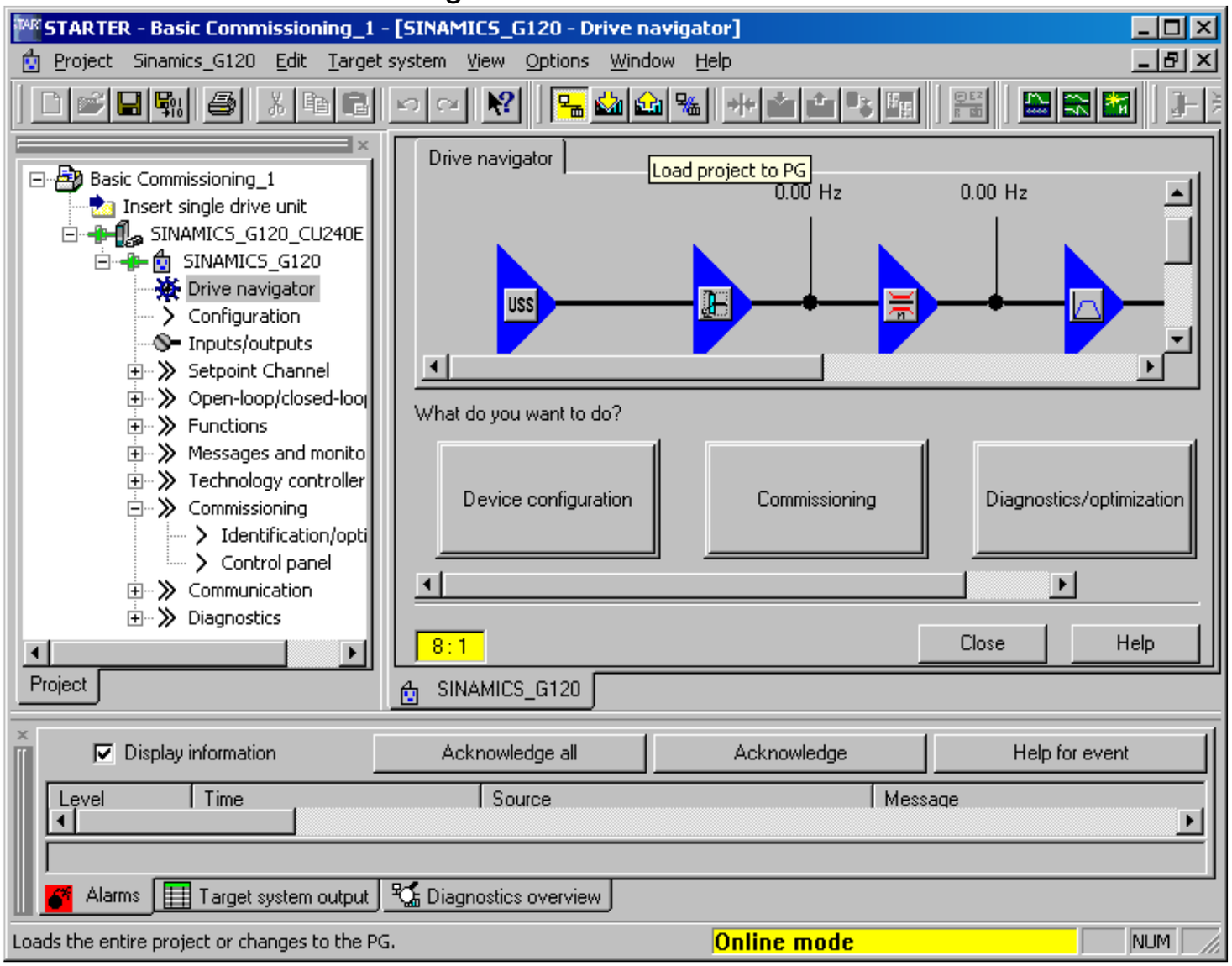

If you have performed the application commissioning, disconnect your PC from the inverter via . In the following dialog select "save changes to drive unit (EEPROM), to current offline project and to PG/PC hard disk".

This selection performs in addition to disconnecting the PC form the inverter the following steps:

: saves project on your PC

: saves drive settings on your PC (Upload)

: Saves data from inverter RAM to EEPROM

4.4 Factory reset

Description

With a factory reset a defined initial state of all of the inverter parameters can be re-established.

To perform a factory reset with STARTER, the inverter must be in the online mode. If it is offline, perform "connect to target system" ( )

The factory reset is performed in the following steps:

Select the drive unit in the navigation tree ( )

- Click the factory reset icon ( ).

Note

When resetting the parameters to the factory setting, the communications memory is re-initialized. This means that communications are interrupted for the time it takes to perform the reset.

A Diagnostics

Fault s and alarms

A fault indicates a severe unfavorable state of the inverter. If a fault occurs, the inverter is powered down with an OFF2 command and the LED "SF" on the Control Unit is active. Faults must be acknowledged before the inverter can be switched on again.

An alarm states that the inverter is

- in a critical state that can lead to a fault (e.g. A0501 current limit)
- in an extraordinary temporarily state e.g. motor data identification

An alarm requires no reaction

Fault	Cause	Remedy
F00001	Overcurrent - Motor power does not correspond to the inverter power	Check that the motor and inverter power ratings are the same.
F00002	Overvoltage - mains supply voltage too high or motor is in regenerative mode.	Check the mains supply voltage
F00003	Undervoltage - mains supply has failed	Check mains supply
F00004	Inverter over temperature - the inverter has exceeded the temperature limits	Check motor loading, pulse frequency setting, ambient temperature or if fitted the fan is working correctly.
F00005	Inverter overload	Check motor power and load cycle
F00041	Motor data identification failure	check that the motor is connected to the inverter correctly and that the motor data entered is correct.
F00052	Power stack failure	Check the connections between the CU and PM.
F00062	MMC contents invalid	Recopy data to MMC and ensure that the process is completed.
F00070	PLC setpoint fault	Check the value of P2040 and ensure it is correct
F00071	USS setpoint fault	Check and improve monitoring timing using STARTER

Fault	Cause	Remedy
F00072	USS setpoint fault	Check USS master
F00090	Encoder feedback loss	Check that the encoder is installed and commissioned correctly.
F0395	The fault occurs after a CU/PM swap or startup clone. It can also be cause by a faulty read from the EEPROM.	

Alarm	Meaning	
A0700	Correct the PROFIBUS configuration	The parameter or configuring settings by the PROFIBUS master are invalid.
A0702	Check connector, cable and PROFIBUS master.	The link to the PROFIBUS is interrupted.
A0703	Check setpoints from the PROFIBUS master. Switch SIMATIC CPU to "RUN".	No setpoints or invalid setpoints (control word = 0) are being received from the PROFIBUS master.
A0704	Activate internode transmitter.	At least one configured internode transmitter is not yet active, or has failed.
A0705	None (fault is with the inverter).	No actual values received from inverter.
A0706	None diagnostic parameter r2041.	PROFIBUS DP software error.
A0710	Communication interface on Control Unit may be broken.	Inverter has detected failure of PROFIBUS communications link.
A0711	Check P0918 address and P2041.	Invalid value of PROFIBUS parameter.

Status display via LEDs

The SINAMICS G120 inverters provide multiple functions and operating states which are indicated via LEDs. The LED for fail-safe inverters are not described in this manual.

Colors

The colors of the LEDs are self explanatory. The Status of the inverter is displayed by the following different LED colors and states:

Meaning	Color	Available in	State		
			on	off	Temporary state (flashing 0.5 Hz)
sample fault (SF)	Red	CU240S CU240S DP CU240S DP-F CU240S PN CU240S PN-F			
Bus failure (BF)	Red	CU240S DP CU240S DP-F CU240S PN CU240S PN-F			
Ready (RDY)	Green	CU240S CU240S DP CU240S DP-F CU240S PN CU240S PN-F			
LNK	Green	CU240S PN CU240S PN-F			
ACT	Yellow	CU240S PN CU240S PN-F			

LED description

- System-Fault LED (SF)

  The system-fault LED indicates a general system error either software or hardware related.

- Ready LED (RDY)

  The ready LED indicates whether the inverter is ready to run.
  This LED does not indicate whether the drive is running or not.

- Bus-Failure LED (BF)

  The Bus-failure LED indicates if any bus failure occurred. A bus failure can be characterized as corrupted communication (e.g. a frame of the PROFIBUS) due to signaling problems on the bus itself.
  The Bus-failure LED indicates the following states:
  - Bus-failure LED off: no Bus failure
  - Bus-failure LED on: no connection to the DP-Master (searching for baud rate)
  - Bus-failure LED flashing 0.5 Hz: I/O device is not configured or is wrongly configured (baud rate found, no data exchange).

- LNK: Shows that link via X20 P1 / X20 P2 is established
- Act: Shows active data transfer via X20 P1 / X20 P2